S-Plus Aspirator

Pick-up straw diameter

☐ Ø3mm ☐ Ø6mm ☐ Ø8mm ☐ Ø12mm

☐ Mechanical Vaccum

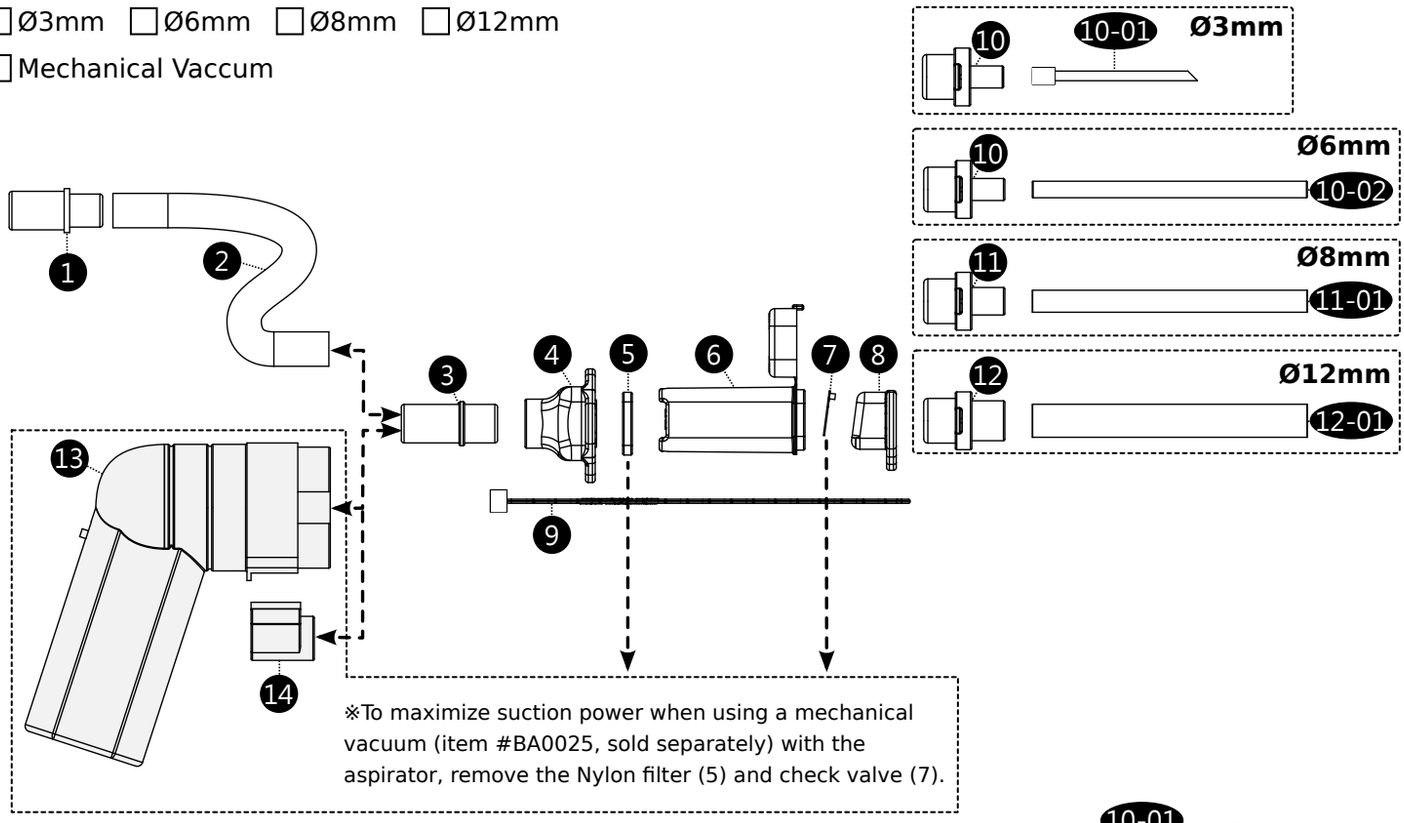

※To maximize suction power when using a mechanical vacuum (item #BA0025, sold separately) with the aspirator, remove the Nylon filter (5) and check valve (7).

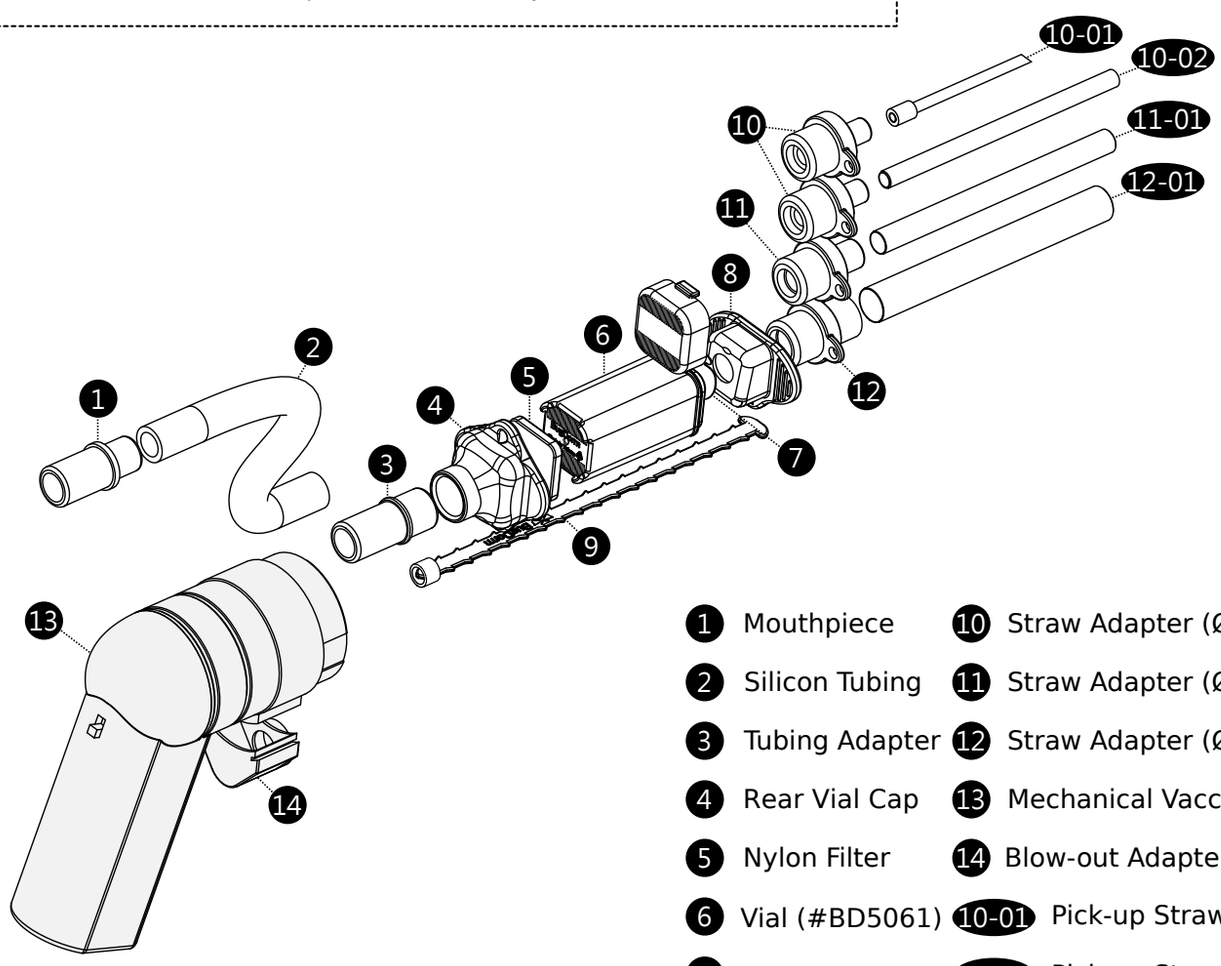

1	Mouthpiece	10	Straw Adapter (Ø6mm)
2	Silicon Tubing	11	Straw Adapter (Ø8mm)
3	Tubing Adapter	12	Straw Adapter (Ø12mm)
4	Rear Vial Cap	13	Mechanical Vaccum
5	Nylon Filter	14	Blow-out Adapter
6	Vial (#BD5061)	10-01	Pick-up Straw (Ø3mm)
7	Check Valve	10-02	Pick-up Straw (Ø6mm)
8	Front Vial Cap	11-01	Pick-up Straw (Ø8mm)
9	Fixing Strap	12-01	Pick-up Straw (Ø12mm)